DIFFERENTIAL AIR PRESSURE TRANSMITTER

TPDPT8 FEATURES

- No Long Term Drift
- No Temperature Shift
- Multiple Range Options
- +/- Range Selection
- Better than 0.2% accuracy near zero
- LCD Display option / IP65 enclosure option

TPDPT8/D

TPDPT8/IP65

The TPDPT8 range of Air Differential Pressure sensors are designed to offer increased accuracy and stability within HVAC applications such as ventilation systems, fume cupboards, operating theatres, fan speed control, air pressure monitoring and leak detection systems.

With no long term drift, temperature shift and an accuracy of 0.2% accuracy near zero (HA variants), the TPDPT8 sensors offer extremely high levels of stability and accuracy.

All sensors are provided with a zero pressure calibration button and include options for +/- range selection for low pressure applications, LCD display and IP65 options.

See TPDPT8-HA-COM datasheet for details on BACnet MS/TP and Modbus Sensor options.

SPECIFICATION

Selectable Ranges for TPDPT8/125:	+/- 0-25, 0-50, 0-100, 0-125
Selectable Ranges for TPDPT8/500:	+/- 0-200, 0-300, 0-400, 0-500
Power Supply:	24V AC/DC +/-15%
Power Consumption:	Standard: 100mA With Display: 130mA (max)
Outputs:	0-5V, 0-10V with 4-20mA
Accuracy @ 25˚C	3.5% of reading + 0.15Pa
Response Time:	5ms typical
Operating Temperature:	-20 to +70˚C
Operating Humidity:	0-80% Non-condensing
Burst Pressure:	> 5bar
Material:	Flame Retardant Polycarbonate
IP Rating:	IP54 (IP65 option available)
Part Codes:	TPDPT8/125 or TPDPT8/500 (Standard) TPDPT8/125/IP65 or TPDPT8/500/IP65 (IP65 Option) TPDPT8/125/D or TPDPT8/500/D (Display Option)

DIMENSIONS

TPDPT8

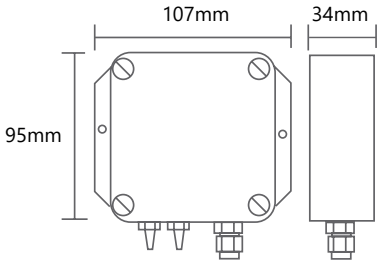

TPDPT8/IP65

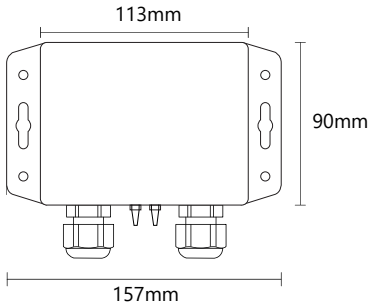

Important
This is an IP65 rated enclosure DO NOT DRILL - use fixing holes provided

CONNECTIONS

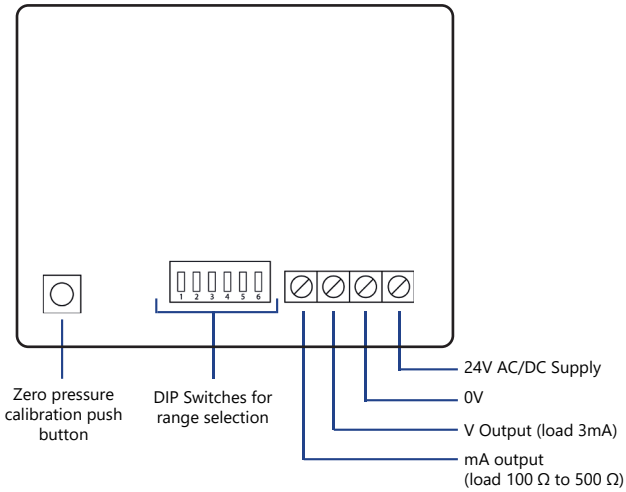

RANGE SELECTION

TPDPT8/125

Range	SW1	SW2	SW3	SW4	SW5	SW6
0-25Pa	ON	OFF	ON	ON	ON	ON
0-50Pa	ON	OFF	ON	OFF	ON	ON
0-100Pa	ON	OFF	ON	ON	OFF	ON
0-125Pa	ON	OFF	ON	OFF	OFF	ON
For +/- Range Selection SW3 OFF For 0-5V output Range Selection SW6 OFF						

TPDPT8/500

Range	SW1	SW2	SW3	SW4	SW5	SW6
0-200Pa	ON	OFF	ON	ON	ON	ON
0-300Pa	ON	OFF	ON	OFF	ON	ON
0-400Pa	ON	OFF	ON	ON	OFF	ON
0-500Pa	ON	OFF	ON	OFF	OFF	ON
For +/- Range Selection SW3 OFF For 0-5V output Range Selection SW6 OFF						

INSTALLATION

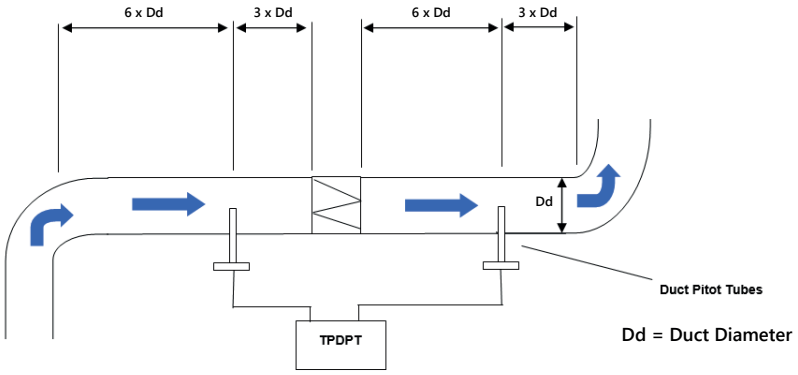

The accuracy of the measurement can be affected by duct air turbulence and air stratification. The above installation guide is just a general recommendation and it is the installer's responsibility to ensure there is no excessive air turbulence or stratification.

For large ducts you may require a multi-point measurement probe.

Note:
- FSS is the full scale range of the sensor which covers from the stated lowest -minus value to the highest +plus value.
- Non-linearity and Hysteresis is quoted as the best line fit for offset pressure, full scale pressure and 1/2 full scale pressure.

Pressure Overload is the maximum pressure which may be applied without causing damage to the sensing element
- This product is for use on dry gases applications only

For further install and setup information please contact technical@titanproducts.com